BALL VALVE

2 - PCS JIS BALL VALVE

502F10K (1/2"- 4")

Feature and Specifications

- Two piece design facilitates inspection and repair
- Blow-out proof stem
- Anti-Static design is standard
- Temperature range : -20 to 450°F
- Face to face : JIS B 2212
- Flange dimensions : JIS B 2212

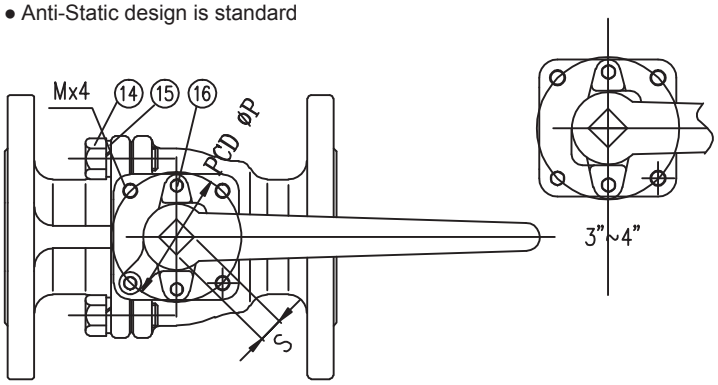

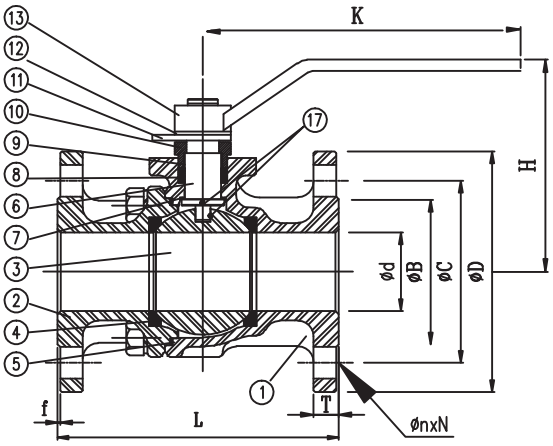

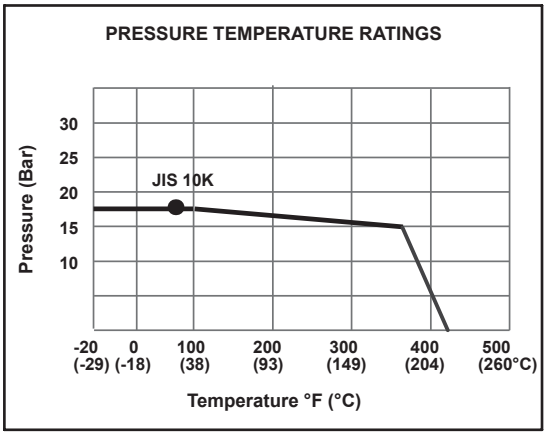

Standard Material Specifications

No.	Part Name	Materials	Qty
1	Body	SUS316	1
2	Cap	SUS316	1
3	Ball	SUS316	1
4	Seat	TFM1600	2
5	Gasket	TFM1600	1
6	Stem	SUS316	1
7	Thrust Washer	POLYFILL	1
8	Packing	PTFE	3
9	Ring	SUS304	1
10	Gland	SUS316	1
11	Travel Stop	SUS304	1
12	Snap Ring	SUS304	1
13	Handle	SCS13	1
14	Bolts	SUS304	1/2" ~ 2" = 4 2-1/2" ~ 3" = 6 4" = 8
15	Bolt Washer	SUS304	
16	Bolts	SUS304	2
17	Static Device	SUS304	2

Dimensions (mm)

Size	Ød	ØB	ØC	ØD	K	L	T	f	Øn	N	H	M	Øp	S	*torque (Nm) at 6.9 bar
1/2"	15	51	70	95	145	108	12	1	15	4	66	M5	42	9	3
3/4"	20	56	75	100	145	117	14	1	15	4	69	M5	42	9	4
1"	25	67	90	125	165	127	14	1	19	4	89	M6	50	11	6
1-1/4"	32	76	100	135	165	140	16	2	19	4	94	M6	50	11	10
1-1/2"	38	81	105	140	240	165	16	2	19	4	107	M8	70	17	13
2"	50	96	120	155	240	178	16	2	19	4	122	M8	70	17	20
2-1/2"	65	116	140	175	240	190	18	2	19	4	138.7	M8	70	17	37
3"	80	126	150	185	345	203	18	2	19	8	158	M10	102	22	67
4"	100	151	175	210	345	229	18	2	19	8	175	M10	102	22	93

*suggested added safety factor 20%

*last updated 08/21