Zertifiziertes QM-System
DIN EN ISO 9001
Zertifikat-Nr. 01017

Vibrating Level Switches

for bulk goods

measuring • monitoring • analysing

NVI

- Pressure: max. 25 bar (6 bar cable version)
- Temperature: max. 160 °C
- Connection: G 1½ or NPT
- Material: stainless steel
- Easy to install
- Suited for universal use
- For density > 0.05 kg/l
- Self-cleaning

N1

KOBOLD companies worldwide:

AUSTRALIA, AUSTRIA, BELGIUM, BULGARIA, CANADA, CHINA, CZECHIA, EGYPT, FRANCE, GERMANY, GREAT BRITAIN, HUNGARY, INDIA, INDONESIA, ITALY, MALAYSIA, MEXICO, NETHERLANDS, PERU, POLAND, REPUBLIC OF KOREA, ROMANIA, SPAIN, SWITZERLAND, THAILAND, TUNISIA, TURKEY, USA, VIETNAM

KOBOLD Messring GmbH
Nordring 22-24
D-65719 Hofheim/Ts.
Head Office:
+49(0)6192 299-0
+49(0)6192 23398
info.de@kobold.com
www.kobold.com

2/08-2018

Description

The KOBOLD NVI level switch is a mechanical system that is made to resonate by an electronic switching operation. When the probe is covered by a medium, the vibrations are damped. This change in the resonance frequency is converted to a switching signal by electronic means.

Applications

The combined vibrating switch can be used in powdery media and granular materials. The medium to be measured should have a density of at least 0.05 kg/dm³. The single rod design prevents deposit formation. The rod is self-cleaning, as the vibrations shake off the medium.

The combined vibrating switch is in successful service in the following applications:

- Plastics industry: powders and granular material
- Chemical industry: powders, pellets and crystals
- Foodstuffs: grain, maize, flour, animal feed
- Paper making: cellulose, wood chips
- Recycling: plastic granules, paper shavings
- Power stations: flue dust, lime, coal
- Stones and earth: coal, stone powder
- Building and construction industry: cement, sand, lime

Selection Criteria

The system is set at the factory for a medium density of 0.3 kg/dm³. When the medium has a low density, the sensitivity can be set to this density with a DIP switch. The level switch is inserted in the medium to be monitored for this purpose.

Technical Details

Probe length:	207 mm (standard) pipe extended version: up to 3 m cable extended version, PE coated: up to 20 m
Process connection:	G 1½ or 1½" NPT
Housing material:	Aluminum, powder coated
Material for wetted parts:	1.4571 (AISI316Ti) for vibrating probe PE cover for cable
Sensor surface:	bright
Medium temperature:	-30 °C ... +110 °C standard probe -30 °C ... +80 °C (NVI-5) -30 °C ... +160 °C high temperature
Ambient temperature:	-30 °C ... +60 °C
Maximum pressure:	25 bar (NVI-1/2/3/4) 6 bar (NVI-5)
Minimum density of medium:	0.05 kg/l
Max. grain size:	10 mm

Max. load:

Version	Standard	Pipe extended	Cable extended
High limit switch	Side mounted	Top mounted	Top mounted
Low limit switch	Side or bottom mounted		
Loadability	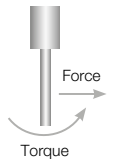	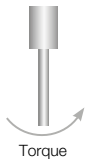	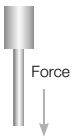
Force	500 N	-	45 kN
Torque	100 Nm	100 Nm	-

Switching delay (selectable):	< 1.8 s or 5 ±1.5 s with covered rod < 2 s or 5 ±1.5 s rod swings freely
Output:	changeover contact 250 V_{AC} / 8A
Power supply:	20 ... 255 $V_{AC/DC}$
Power consumption:	≤ 2.5 VA / 2 W
Electrical connection:	2 x M20 x1,5
Protection:	IP 67
Weight:	approx. 1.9 kg (NVI-1/2) approx. 1.9 kg + 1.4 kg/m (NVI-3/4) approx. 1.9 kg + 0.6 kg/m (NVI-5)

2/08-2018

Order Details (Example: **NVI-1 305 R**)

Model	Version	Power supply	Connection
NVI-	**1** = standard probe **2** = standard probe, high temperature	**305** = 20...255 $V_{AC/DC}$	**R** = G 1½ **N** = 1½" NPT
	3* = pipe extended **4*** = pipe extended, high temperature		
	5* = cable extended		

* Mention desired length in clear text (in mm)

Dimensions [mm]

Standard probe

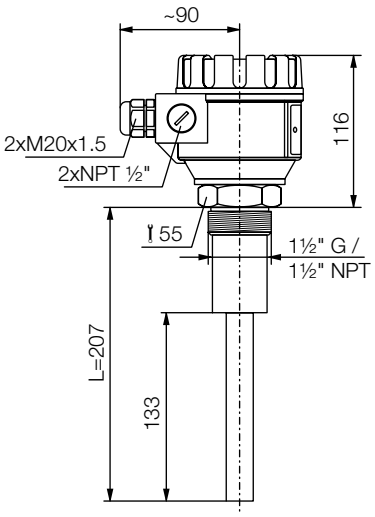

Pipe extended probe

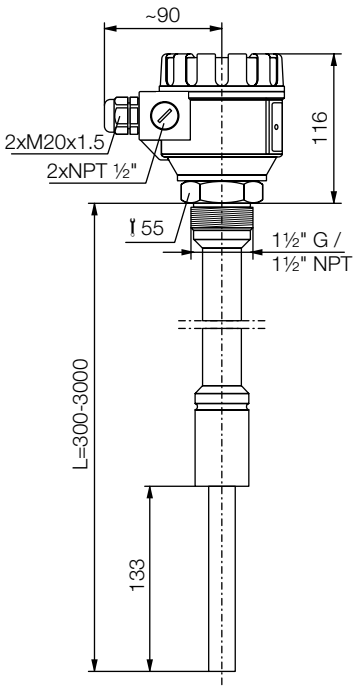

Cable extended probe